Inspection and Assembly of a Power Solutions 6-1 Lister-Type Diesel Kit Engine Part II

July 22, 2006

Gentlemen,

Here's the proof. I removed my other engine from its generator bed and bolted down the test engine. After filling the crankcase with oil and evicting the air bubbles from the fuel lines and filter, I engaged the starting handle and gave it a whirl. I closed the decompressor and the engine chugged to life. The governor linkage was initially set too high and I had to close the fuel rack by hand. Best to warn customers to start the engine with a hand on the linkage, then turn the adjusting screw until the desired speed is reached.

The engine settled down to a smooth and steady beat. No different in action or sound from my Ashwamegh. Tappets rotate about ½ turn each time they lift, the governor seems to be working well, and there are no fuel leaks. Even the petcock on the bottom of the tank does not leak a drop. And the engine seemed to be well balanced. My Ashwamegh is a very smooth running engine, and this one is no rougher, and possibly a little smoother.

I'll eventually transfer the generator from Old Silver to this engine and hook it up to cooling water so I can put a load on it. But for now, everything is working just as it should work. No surprises.

Quinn

September, 17, 2006

"No surprises," said I. Sometimes your words come back to haunt you. While things look right on the surface, problems might lurk unnoticed in hidden places. And sometimes there might be deliberate concealment of dirt and misfit parts by some assemblers.

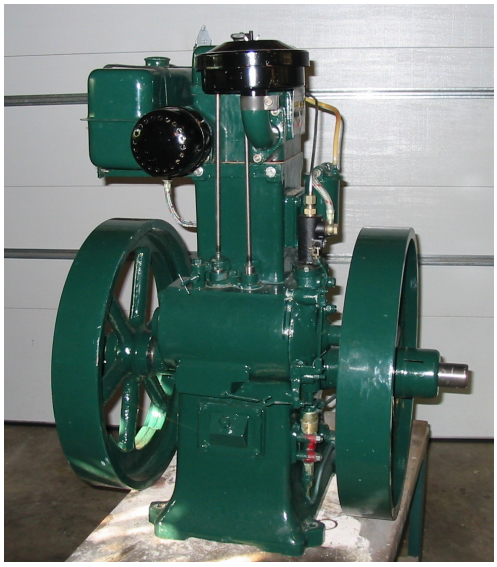

However, these engines are very much individuals. The quality of Indian Listeroids is consistently inconsistent. One engine appears to be just about perfect and the next crate opened contains an engine with a piston wrist pin full of sand. So until Indian engine assemblers decide to stop paying lip service to quality by citing that they build to I.S. (Indian Standard, i.e. "Good enough for India") these engines should continue to be checked out thoroughly, and preferably disassembled, examined, cleaned and reassembled before being put to serious work.

The British built Lister engines have attracted a loyal following by virtue of their excellence in design and quality of construction. Parts were carefully made from appropriate materials by skilled foundrymen and machinists. They were installed and fitted with care, and the result was an engine that was reliable ran for a long time with little maintenance.

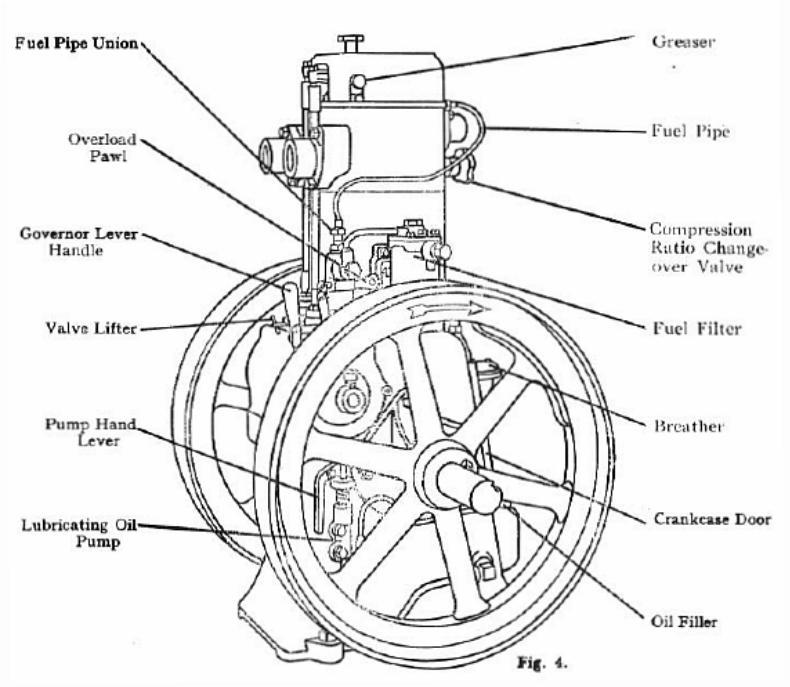

Fig. 4.

The Indian Lister-type engine, or "Listeroid," shares the same basic design as its English parent, to such an extent that most Indian parts are interchangeable with those of the British engine. The original design has even arguably been improved by the addition of tapered roller bearings (TRBs) and the elimination of the unnecessary Freeman-Sanders compression changeover valve, which Lister themselves did away with in 1958 with the introduction of the 8/1 engine. That engine featured a combustion chamber plug and a higher 17.5 : 1 compression ratio, which is more in line with that of modern diesels.

Despite the known quality problems of these engines, we know the design is a sound one and the parts are largely of good quality. However the assembly and fitting of the parts is one area that could stand some improvement. From time to time photographs have surfaced of workers squatting on dirty factory floors assembling engines, the parts

of which lie scattered around them. So perhaps the engines should be imported as parts rather than subassemblies or finished engines. With some care and a little work, and in extreme cases with help from an engine machine shop, the experienced do-it-yourselfer can come up with a quality engine that should run for a long time.

The Beta Test engine served its purpose. In Part I, I assembled it and had it running in less than 6 hours without even hurrying. But along the way I noticed several things that I wanted to do to make the engine better. Sure, it would run as it was, but something George wrote on his Utterpower.com website a while back stuck in my mind. Something to the effect that he thought that perhaps one should consider these engines to be nothing more than a loosely assembled collection of parts that should be disassembled, cleaned, and then reassembled and fitted carefully for best service life. After stripping and reassembling my first engine, I found that George's advice was sound, so I decided I'd tear down the Beta Test engine to bare metal, and then reassemble it carefully. Following are my observations and thoughts as I proceded. This time I was under no time constraints, and the final product would be as good as I could make it. I never liked the green paint, anyway.

Disassembly

I began disassembling the engine by removing the gib keys and the flywheels. I found that, at 140 lbs., the flywheels that come with the PS kit weigh about 20 lbs. more than did those on my Ashwamegh. So I felt better about how much difficulty I had lifting these flywheels out of their crate than I did moving the Ashwamegh's 120 lb. flywheels a year ago. It wasn't just advancing age after all! I e-mailed an inquiry to David Edgington, author of *The Lister CS Story* (1), about the weight of the original Lister 6/1 flywheels. After he did some checking, he replied that the original 6/1 spoked flywheels weighed 120 lbs.

Next came the fuel tank, fuel lines and fuel filter. Then out came the fuel injector and the high pressure fuel line. I placed the fuel injector and its copper gasket in a clean zip lock plastic bag. Keeping small parts including nuts, bolts, pins, keys, etc. in plastic bags is a good way to keep them organized. If you place all the small parts from an engine subassembly, such as the cylinder head, in the same bag, reassembly proceeds much faster because there are fewer parts to sort through at each step. If this had been a car engine I was working on, I would have needed to mark each bag with the identity of the parts. But these simple engines have so few parts, that was unnecessary.

Next, I took the rocker arm assembly off the head, and removed the push rods and set them aside. Then the head nuts came off and I removed the head.

Next, off came the camshaft end covers and that is where the fun began. The Indian assemblers don't seem to understand how tapered fittings work. That's obvious when

you look at how they “fit” gib keys. A while ago one of the more prominent Indian engine erectors circulated a video showing Listeroid engines being assembled in India.

The video showed many practices that were horrific to our Western sensibilities, but none more so than that of a worker swinging a large sledge hammer to set the gib keys. While I was unable to locate that video, at left is a screenshot I took from an Indian video that is currently on YouTube which shows a worker swinging a sledge hammer to set the gib key in what appears to be a Petter clone engine. The worker, by using a sledge hammer, manages to deform the key and the keyways sufficiently to lock the flywheel to the crankshaft. However, by properly fitting the key, a few taps with a small hammer should achieve the same result, without risking damage to the tapered roller bearings, the crankshaft, and the flywheel hub.

Tapered keys and pins are elegantly simple methods of holding parts together securely. When the mating surfaces of a tapered pin and hole match correctly and are clean and free from oil and grease, all that is required to set the pin is a tap from a small hammer.

> ***“Somewhere in my writings, I shared the perfect Hell for an old retired German craftsman. Force him to work on one of the Indian assembly lines in Rajkot, give him the job of fitting gib keys with a sledge hammer; no doubt this would be a version of hell for him.”***
>
> ***– George Breckenridge***

With respect to tapered pins, some folks insist on lightly peening the small end so that it cannot work its way out. The parts can also be dusted lightly with chalk or lime dust to provide a little more friction, but a firm tap should be all that is necessary to keep the parts together. But to mash both ends of the pin as if it were a rivet is crude and unnecessary and makes disassembly a nightmare.

I resorted to using an abrasive cutoff wheel in a 4.5” angle grinder and ground off BOTH ENDS of the tapered pin. The pin had been so deformed, it was impossible to determine which was the large and small end of the pin without cutting both ends. Once I found the small end of the pin, I tapped it out using a 32 oz. ball peen hammer and a drift pin, but it was not easy. I really had to whack the pin to get it to move and was afraid I would shear off the end of the camshaft doing so. I figured if I did, I would have a project on my hands, but I have frequently thought it would be worthwhile to extend the camshaft a few inches in order to be able to drive a gear pump for circulating lube oil. Fortunately it was the pin and not the end of the camshaft that yielded. I was so disgusted by what had been done, I forgot to snap a picture.

I disconnected the linkage between the governor and the injection pump on the other side of the engine and removed the camshaft after first removing the tappets and guides. Below is a close-up of the steel camshaft end bushing.

Looking inside I discovered a very small amount of dirt, but more bothersome to me was the poor finish of this bushing. There are rough spiral marks in the bore that look like what you’d get if you drilled a deep hole with a twist bit without periodically withdrawing the bit and blowing out the chips. It looked like the bushing had not been finished with a ream, or even on a lathe with a boring bar. However the bushing had a nicely finished shoulder on the outboard end that was where the camshaft rode. I applied some Prussian Blue and found that the poorly finished section of the bushing did

not contact the camshaft. The camshaft showed no wear marks after ½ hour of total run time. The bushing measures 3.005” long, 0.880” inside diameter and 1.375” outside diameter. The camshaft is 0.875” diameter, so the clearance is 0.005” a decent slurp fit.

It would be simple to make a puller for the bushing with a piece of threaded rod, a 2” pipe nipple and a couple of nuts and washers, and I’ve given some thought to replacing the bushing with an oil-impregnated bronze bushing. But that might be polishing the fruit at the bottom of the bowl. A hardened steel camshaft turning only 325 rpm, riding in a lubricated steel bushing should last almost forever so long as it gets lubricated, and I had some ideas about how to enhance oil flow to the bushing.

The Half-Gasket Conundrum

Next, I rotated the crankshaft until the piston was at BDC and lifted the cylinder off the piston. I removed a few paper base gaskets and then found this:

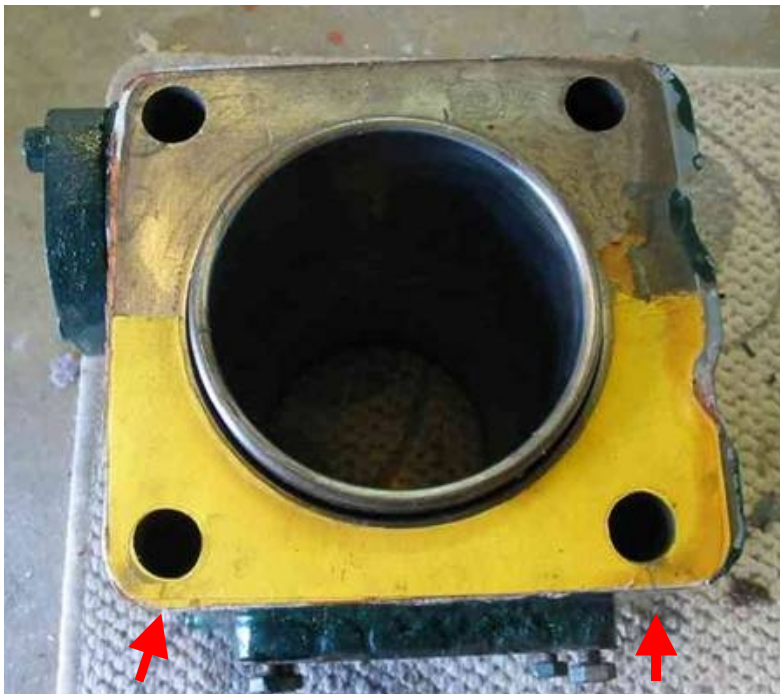

What the heck could that be? One 0.0075” thick half gasket had been stacked as a shim on the starting-flywheel side. Note the tears in the shim for the stud holes (red arrows). That indicates the shims were placed beneath the cylinder *after* the cylinder had been placed on the crankcase. I had been alerted to the existence of the yellow half-shims by Jack Belk, and John Ferguson e-mailed me that he had seen them, too. At the time nobody knew for sure what the gaskets were for, but it appeared that somebody in Rajkot evidently thought the cylinder casting or the cylinder sleeve was not square and shimmed up one side 0.0075”. That’s cause for worry because if the cylinder is not square to the travel of the piston, it might scuff against the liner at the bottom and/or top of its travel, or excessive side loading might prematurely wear the wrist pin bushing and/or rod bearing. I took the cylinder to a friend’s machine shop and placed it on a ground slab of steel and using a height gauge determined the cylinder base and head surfaces were parallel to each other without any shims. However that doesn’t mean that the cylinder sleeve was perpendicular to the base.

Next, I replaced the piston with rings into the cylinder and lowered the cylinder onto the crankcase WITHOUT any base gasket or shims. Metal to metal. I also remounted the crankshaft in the TRBs and torqued everything to spec. Because the shim gaskets were absent, at TDC the piston projected slightly above the rim of the sleeve.

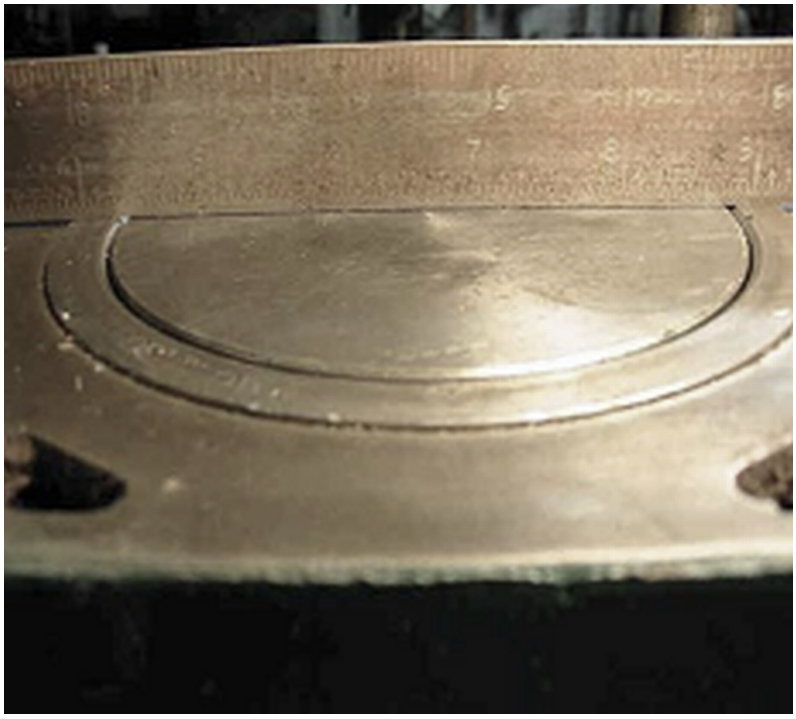

I balanced a straightedge on the top of the piston. I slowly rotated the crankshaft until the piston receded inside the cylinder, leaving the straightedge balanced on the liner with a sliver of light gleaming between the piston top and the bottom of the straightedge. The sliver of light was even, side to side. Had the piston been out of square with the cylinder casting, by even a couple of thousandths, it would have been visible. And if the cylinder liner had been out, I would have seen that too. So the piston is square to the cylinder, the cylinder base is parallel to the top. So how come the Indian assembler thought he needed to shim up one side of the cylinder by 0.0075”?

Next I pulled the cylinder sleeve. I don’t have a shop press, but I do have a drill press. I removed the sleeve by inverting the cylinder and placing it on a couple of pieces of wood on the table. I cut the corners off a piece of plywood to just fit the skirts of the sleeve and cranked the table up until it was resting against the chuck. Then I cranked down on the spindle, and out popped the cylinder liner. Once the cylinder sleeve moved about an inch the O-rings slipped off a ledge and the liner dropped out.

There was a lot of dirt/grit in the water gallery space around the cylinder sleeve, amongst the O-rings, and especially in some of the nooks and crannies of the cylinder casting. That should not be a problem because that grit would never see the inside of the crankcase, and it would probably settle to the bottom of the water gallery once some vigorous convection currents get going.

Here are pictures of the sleeve and the cylinder casting just as they appeared at separation.

Note the location of the double grooves near the bottom of the sleeve for the O-rings and the ledge machined near the top of the sleeve. The ledge engages a corresponding

one on the cylinder casting which holds the cylinder liner in place. Rubber o-rings at the base of the liner prevent coolant from contaminating the crankcase.

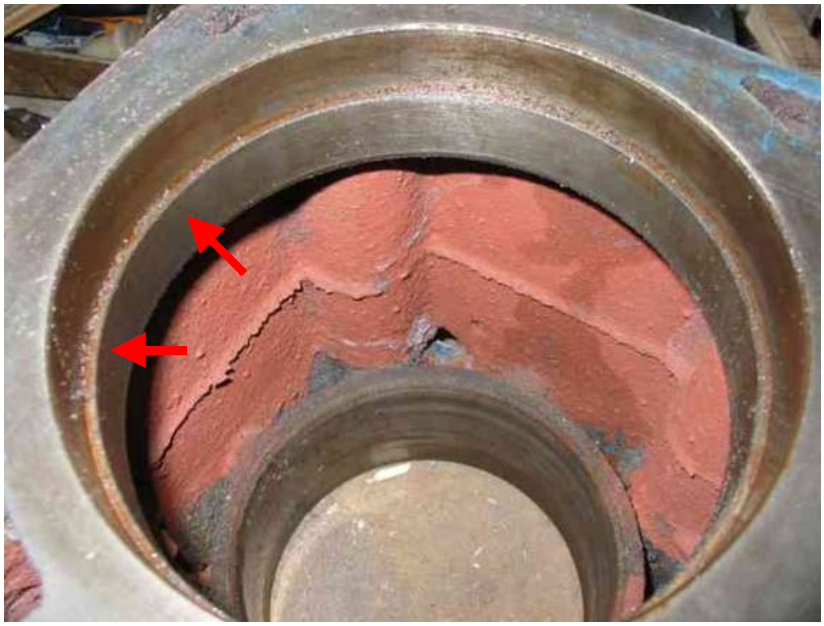

Looking down the bore of the cylinder casting in the picture below you can see a ledge (red arrows) machined into the cylinder casting that engages another ledge (red arrow in picture above) that projects out from the sides of the sleeve. These ledges must be clean (which they're not in the picture) or the cylinder will not be square to the casting

and the lip will project higher above the cylinder casting than it was intended to project. You can see the grit that was left on the ledge, which raised the cylinder sleeve appx. 0.005” above where it sits when the ledges are clean.

Tapered Roller Bearing (TRB) Housings

The next task was to remove the crankshaft. I removed the rod bearing cap, and pulled the piston and connecting rod through the top of the case and set them aside. I noticed

the crankshaft could not be turned by hand without exerting several ft-lbs of force which is a lot stiffer than I would have liked it to have been. It was clear that whoever assembled this engine wasn’t very careful to avoid excessively pre-loading the TRBs.

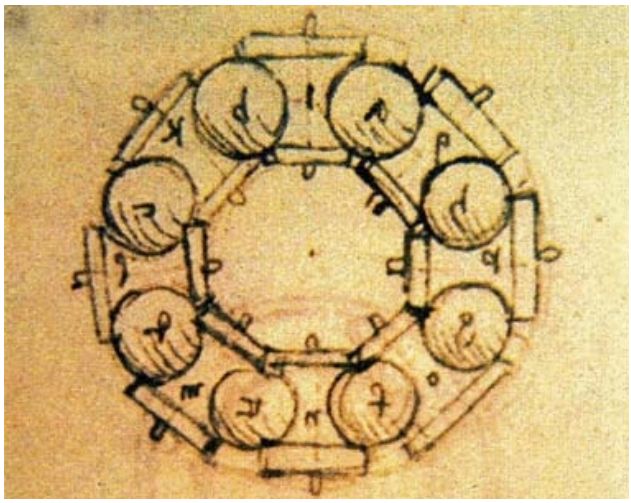

Here’s something I bet you didn’t know: The ball bearing was invented by none other than Leonardo da Vinci, who, in the year 1500, published drawings of wooden ball bearings in his design for a

helicopter. That's right, a helicopter. This is the first recorded use of ball bearings in a machine. (2)
A twist on daVinci's invention is the tapered roller bearing (TRB). TRBs have the advantage of being able to withstand axial as well as radial loads, whereas journal or plain bearings, ball bearings, roller bearings and especially needle bearings are quickly damaged by axial loads. Typical applications for TRBs, which are always used back to back in pairs, are the front wheels of cars and trucks and on the propeller shafts of ouboard motors.

Tapered roller bearing end play on the crankshaft must be set up correctly. Set too tight, the bearing will overheat and soften the rollers and race, causing spalling or tearing away of metal from the rollers and raceway, resulting in failure. Set too loose and excessive endplay will allow a rocking motion to develop which disrupts the even distribution of force among the rollers, also causing bearing failure by excessive wear. The key is to hit the mid point between too much endplay and not enough. Timken recommends an end play of between 0.001" and 0.007". (3)

In the case of the Lister-type engine, the majority of the load on the crankshaft TRBs is radial, so the bearing setup is not as critical as it would be for the front wheels of a car. The crankshaft end play specification in the original British Lister 6/1 manuals calls for 0.005" - 0.010" end play on the crankshaft, which was presumably for a journal bearing engine. Adjustment of the crankshaft TRBs is effected by measuring the end play in the crankshaft and adjustment is carried out by changing the number of paper shims that are placed between the crankcase and the TRB housing flanges.

I removed two 0.018" (rust colored) shims from the left side TRB housing and one 0.018" and two (yellow) 0.0075" shims from the right housing. I think there probably should have been about another 0.020" there to get the proper spacing for the bearings, but I'll address that when I'm reassembling the engine. With the TRB housings removed, the crankshaft came out and I set it aside in a safe location with clean rags tied around the crankshaft pin to prevent any damage to its polished surface.

Oil Pump and Lines

I removed the oil pump and oil lines from the crankcase. The oil distribution system has a crossover tube that lies just inside the big crankcase access door. While I was disassembling the engine in preparation to strip the paint, I puzzled for a while at how the crossover tubing could be disconnected. It appeared that there

must be a sleeve fitting somewhere. Otherwise I couldn't see how to remove it. The picture at the bottom of the last page shows the relationship of the components. What appears to be dirty or damaged threads in the lower left stud hole in the picture is actually the remains of a rubbery thread sealer the assembler placed on the threads of the stud during assembly. Since water may find its way into the stud cavity from a weeping cylinder head gasket, it's a good idea to seal the threads when you replace the studs to keep coolant from dripping into the crankcase.

Here's a shortcut taken that nobody is likely to find until they tear an engine apart. Both ends of the crossover tube were ground to a taper but were never soldered. No compression fittings, no tapered seats. One wonders how much oil delivered by the pump leaked out of these fittings. It is fortunate that this engine is splash lubricated and that the oil pump is really not necessary for effective lubrication of the TRBs.

Removal of Oil Seals and TRB Races

Before stripping the paint, I tapped out the TRB races and oil seals using tools I'm not proud of, and which I don't recommend: a screwdriver and a hammer. I know there's a better tool for this, but I don't have one. So I wrapped some cloth around the tip of the screwdriver and tapped gently.

Gentle tapping on the handle of the screwdriver freed the seal without damaging it.

I flipped the bearing housing over and tapped out the bearing races using the same method without incident.

Stripping Paint from Engine Castings

While I was removing small parts from the engine, I experimented with different methods to remove paint, gray primer, plaster filler and some rust-colored filler that seems to be used everywhere on this engine. Common paint stripper is too slow and weak and needs to be applied multiple times in order to remove the tenacious green paint from metal surfaces.

I finally settled on drain cleaner which is mostly sodium hydroxide (lye) available from Home Depot in 32 oz. (2 lb) bottles for just under $8 U.S. This is the dry, granular drain cleaner, not the liquid.

Now drain cleaner is intended to dissolve clogs due to natural organic materials like hair and kitchen grease. It does that by hydrolyzing bonds between amino acids in proteins (eyes/hair/skin) and saponifying fats, sort of like making soap, which renders them water soluble. However, your eyes, hair and skin are made of the same stuff that drain cleaner is intended to dissolve, and it has no way of knowing where the drain clog ends and you begin. So if you are tempted to try the following, **wear eye protection, heavy rubber gloves and keep all exposed skin covered to avoid injury**. Better yet, take your

parts to an auto machine shop and ask them to hot tank them for you. It's simpler, safer and will work better than the method I am about to describe.

Because kitchen grease isn't the same as mineral oils that are used in machinery, for the purpose of paint removal this stuff works best on parts that aren't covered in oil or grease. It's a good idea to first wipe away any oil or grease, then wash the parts with solvent or a strong detergent such as dishwashing detergent and hot water before stripping paint.

Make sure you observe all the cautions on the bottle of drain cleaner. Especially be careful of your eyes. Wear eye protection when working around this material. And never allow anything made from aluminum, such as a piston from a Lister(oid) 8/1, or bearing shells, or anything made from copper, brass or bronze to go in the tank. The tank is for ferrous (iron and steel) metals only.

Fill a 5-gallon plastic bucket about half full of really hot water. Sprinkle a half cup of drain cleaner in the water and stir it around until the granules dissolve. Then carefully lower the parts into the liquid. Don't allow them to splash. Then continue filling the bucket with hot water until the parts are just covered. Then stir the solution thoroughly. After a while the liquid turns any of several colors as the paint dissolves.

I left the cylinder and several small parts in the bucket for 24 hours. At the end of that time I removed the cylinder and hosed off the residue. Results: Green paint gone. Gray primer gone. White plaster filler gone. Red brick dust filler gone. Rust all gone. Bare paintable metal was all that was left.

The Do-It-Yourself Hot Tank

While I was at it, I got inspired (carried away?) and decided I'd hot tank the crankcase, too. So I got a new 34 gallon plastic trash can (my old one has holes in the bottom). I placed a few bricks in the bottom to use as spacers, then with some help I placed the crankcase, stripped of everything removable, inverted in the trash can so the cylinder deck was resting on the bricks. Then I began filling it with hot water and added 1 ½ bottles (3 lbs) of drain cleaner.

The liquid bubbled like a witch's cauldron as the drain cleaner dissolved. Lots of vigorous activity in there. In order to ensure complet mixing I lowered a small plastic submersible fountain pump to the bottom and plugged it in. I thought it might, too, be dissolved by the lye, but after a few hours I pulled it out and it was running, so I left it in the trash can overnight.

Again, care was taken to ensure that no liquid splashed out, and the pilot light on the gas water heater in the background was turned off as a precaution. To my knowledge only cast iron and paint and sodium hydroxide were in the can, so no hydrogen should have been produced. But it's best to be careful and make sure there is plenty of ventilation available and no sources of ignition are nearby.

The next morning I lifted the crankcase out of the trash can and hosed it off. You can see in the picture at left that the paint removal was not 100 percent effective after only 8 hours soaking. I was too eager to see results and the concentration of drain cleaner wasn't enough to do the job in the time I allowed. There are still a few places where the paint didn't quite come off. And two areas in the bottom of the crankcase held bubbles of air, keeping the caustic solution from reaching them, so I'll have to strip them the old fashioned way. Next time I would use two full bottles (4 lbs) of drain cleaner and let the case soak a full 24 hours before removing. No harm is done to the metal by allowing it to soak a little longer.

While the parts are drying, some minor surface rust formed. The rust was very thin and was easily wiped off with a dry rag. Without the paint, I was able to see the cast iron for the first time. I was very pleasantly surprised by the appearance of the castings. There were very few imperfections in the casting, and the metal was of the same color and texture throughout the casting. I wonder what it would look like chromed.

Below is a shot of the inside of the crankcase. That nice smooth white paint that the Indian painter carefully applied is history. The bare casting remains. I poked around and found only one dime-sized area of grit behind the bumpout that holds the cam bushing at upper right of the picture below. Whoever prepared this crankcase did a decent cleaning job before it was painted. There are two reasons for painting the inside of one of these engines. The first is that cast iron is porous and lube oil will weep through the castings eventually. Second, any casting sand that might remain can be

effectively sealed under a layer of paint. Unlike a gasoline engine, diesel engine crankcases are not a hostile environment to oil based enamel paints. There's no reason to use expensive two-part epoxy paints inside a crankcase. I planned to use the rest of the can of red Rustoleum enamel in a quart can that I painted the inside of my Ashwamegh with.

Sand Alert!

As I was drying the stripped castings and admiring how clean everything was I noticed that the inside of the main bearing carriers were unusually rough. On closer inspection I discovered that the castings were coated with a very thick layer of casting sand. These parts had not been cleaned before they were painted. *And these parts were the parts that held the TRBs*. Not good. But I guess it wouldn't be an Indian Listeroid without some sand.

A close-up photograph shows the gritty surface. The grit was removed in a few minutes by using a wire wheel in the chuck of a portable drill. The surface is now ready for paint.

Sweeping the dirt under the rug like that would be unacceptable, were the part made anywhere but India. And had the worker responsible for this deception been employed by *any* company in the West, he'd have been fired for doing such a thing.

Measurement of Cylinder Sleeve Squareness

I replaced the cylinder sleeve in the block and set it up on wooden blocks in order to test the squareness of the sleeve to the top of the cylinder casting. I used a piece of ½" aluminum with a machined edge as my straight edge and measured the protrusion of the cylinder sleeve above the casting in four places using brass feeler gauges.

This measurement reveals two things. First, it indicates how square the sleeve is to the cylinder casting. Second, it will also indicate where there is excessive protrusion of the sleeve over the cylinder casting.

George recently indicated that word from a trusted contact in India had it that the cylinder liner should protrude between 0.008"- 0.010" above the cylinder casting surface. It looks like most Listeroids have sleeves that protrude more than 0.010" and that may explain why so many people are plagued by leaking head gaskets. Before pulling the sleeve I measured its protrusion at 0.030." It's possible some grit or a machining irregularity held the liner higher on one side than the other, so the earlier measurement needed to be confirmed.

Results, displayed on the drawing at right, indicated that there was 0.001” difference between the front and back measurement (I call “front” the side where the camshaft is), and 0.004” along the axis of the wrist pin.

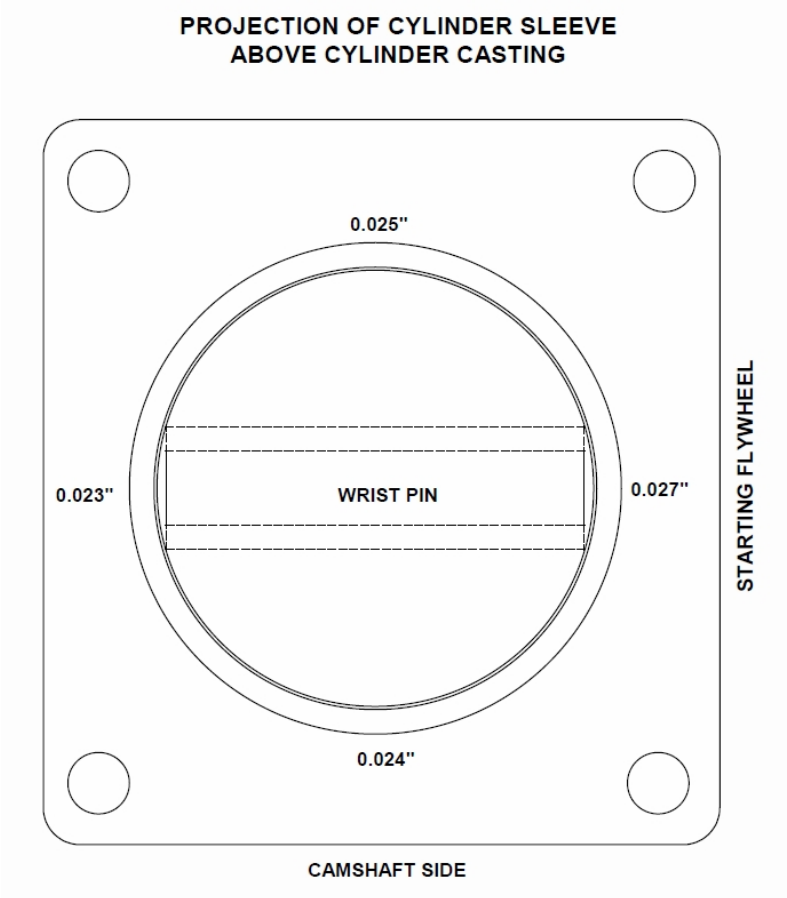

So how far out of level is the top of the cylinder liner? We can disregard the 0.001” front and back. How ‘bout 0.004” along the axis of the crankshaft? I think that’s worth machinig off.

Returning to the mystery of the half gasket placed under the starting flywheel side, recall that the squish area was measured on both ends of the wrist pin as 0.065” Without the 0.0075” gasket on the flywheel side, that measurement would have been 0.0575 on that side of the piston. The shims were used to make the bottom of the cylinder head parallel to the piston top surface.

End Notes

1. The Lister CS Story, by David Edgington is available from http://www.stationaryenginebooks.co.uk/listercs.htm The book is loaded with information. I highly recommend it!

2. http://timken.com/en-us/solutions/automotive/aftermarket/lightduty/TechTips/Documents/Vol2Iss1_Proper_Tapered_Bearing_Settings_English.pdf

3. This supports my long held belief that da Vinci was actually a political dissident from an advanced alien culture who was banished to the primitive Earth for annoying someone very powerful who wanted him out of the way. He appears to have spent the rest of his life trying to build modern machines, such as the helicopter and airplane in a backward civilization that had not invented the technology necessary in order to build his inventions, much less the tools with which to build them. He must have been a very frustrated man.